STELLAR TECHNOLOGY

ISO 9001/AS9100 Certified

YOUR ENGINEERED SOLUTION SOURCE SM

RDE900

ROD-END SHACKLE TENSION LOAD CELL

DESCRIPTION

The Series RDE900 Shackle load cells are special rod-end tension load cells, incorporating integral tongue shackle connections.

Constructed of welded stainless steel, these bonded foil strain gaged force sensors provide reliable performance for very demanding applications. Features include shock and vibration protection. Customers can also specify optional internal amplifiers for analog (current and voltage) or digital outputs (RS232, RS485, CANbus). Intrinsically safe 4-20 mA output versions are available.

The RDE900 load cells are used in a number of applications ranging from wire-line and slick-line upstream oil and gas exploration to submersible towing arrays. Each unit is shipped with a 5 point calibration record traceable to NIST as standard.

STANDARD FEATURES

- 0.20% Accuracy
- In-Line Tension
- Tongue/Shackle Connections
- 2 mV/V
- Welded Stainless Steel
- -40°F to 250°F Standard Temperature
- Shock and Vibration Resistant
- 5 Point Calibration Record Traceable to NIST

OPTIONAL FEATURES

- Metric Versions
- Special Calibration
- Customer Specified Electrical Termination
- Subsea/Submersible Versions
- Internal Signal Conditioning (Analog or Digital)
- Intrinsically Safe (4-20 mA ATEX, IEC, CSA)
- -65°F to +400°F Operating Temperature

PERFORMANCE

STANDARD RANGES
5K to 160K lbs.

OUTPUT
2mV/V nominal.

LINEARITY
0.20% FSO.

HYSTERESIS
0.20% FSO.

REPEATABILITY
0.05% FSO.

TEMPERATURE EFFECT ON ZERO
0.005% FSO/ F.

TEMPERATURE EFFECT ON SPAN
0.005% Reading/°F.

ZERO BALANCE
1% FSO.

ENVIRONMENTAL CHARACTERISTICS

OPERATING TEMPERATURE RANGE
-40°F to 250°F.
(-40°F to 400°F optional.)

COMPENSATED TEMPERATURE RANGE
70°F to 170°F.
(-40°F to 400°F optional.)

A US Manufacturer of: Pressure, Temperature, Load/ Force/Torque, and Displacement Sensors.

(See Series RDE900 for Threaded End Versions)

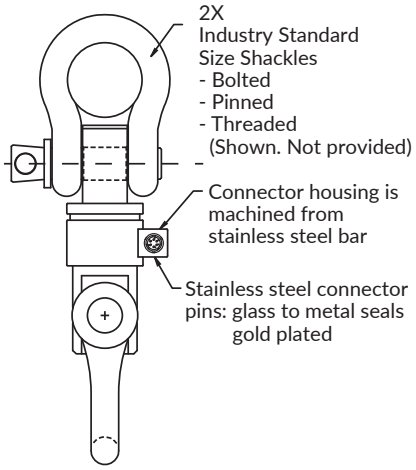

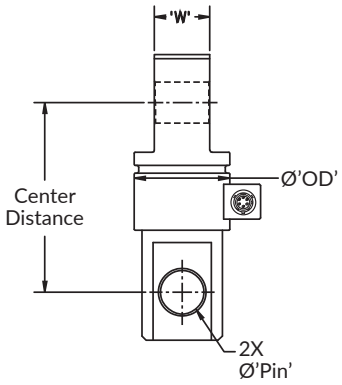

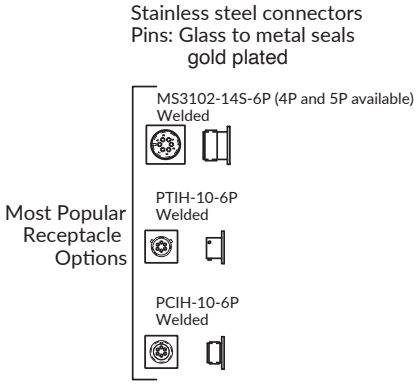

			FITS SHACKLE		
CAPACITY (LBS)	**CENTER DISTANCE**	**OD**	***PIN**	**W**	**SIZE**
2.5K, 5K	3.88	1.5	3/4	0.97	3-1/4 TON
10K, 15K	4.75	2.0	1	1.31	6-1/2 TON
20K, 25K	5.50	2.8	1-1/8	1.60	8-1/2 TON
35K	6.35	3.0	1-1/2	2.04	13-1/2 TON
50K, 60K	8.53	3.7	2	2.69	25 TON
80K, 100K	11.10	4.5	2-1/4	3.00	35 TON
120K	12.50	5.5	2-3/4	3.76	55 TON

NOTE: Shackle sizes not shown available. Load cells for any capacity may be ordered in a larger shackle size than shown.

MECHANICAL CHARACTERISTICS

STATIC OVERLOAD WITHOUT DAMAGE
150% Range.

CALIBRATION
Standard calibration is 5 pts
(0, 50%, 100%, 50%, 0 Range) tension.

MATERIAL
Welded stainless steel.

THREADS
See table.

ELECTRICAL CHARACTERISTICS

BRIDGE RESISTANCE
350 Ohms nominal.

EXCITATION
10 Vdc or Vac.

INSULATION RESISTANCE
Greater than 5000 megaohms at 50 Vdc.

ELECTRICAL TERMINATION
Welded PTIH-10-6P
Stainless Steel Connector or equivilent.

ELECTRICAL CHARACTERISTICS

CONNECTOR PINS (STANDARD)

A	+EXE	B	+SIG
C	-SIG	D	-EXE
E	N/C	F	N/C

Customer specified wiring codes are available.

MODIFICATIONS AND WARRANTY
MODIFICATIONS: We realize transducer applications vary greatly and as such our designs are flexible. Choice of pressure port, electrical termination, material compatibility and performance characteristics are a few of the many options available. Specifications on this datasheet represent the standard configuration only. Product and company names listed are trademarks of their respective companies. Specifications subject to change without notice.
WARRANTY: Stellar Technology warrants that its product shall be free from defective workmanship and/or material for a twelve month period from the date of shipment, provided that Stellar Technology's obligation hereunder shall be limited to correcting any defective material FOB our factory. No allowance will be made for any expenses incurred for correcting any defective workmanship and/or material without written consent by Stellar Technology. This warranty is in lieu of all other warranties expressed or implied.

STELLAR TECHNOLOGY
ISO 9001/AS9100
237 Commerce Drive • Amherst, NY 14228 • USA
Tel: 716.250.1900 • Fax: 716.250.1909
Web: stellartech.com • Email: info@stellartech.com

Due to the nature of technology, changes are inevitable. For latest technical specifications, see our website.

Copyright © 2023 STI • All Rights Reserved Datasheet P/N 227202H DCN 15264